PJT.NO

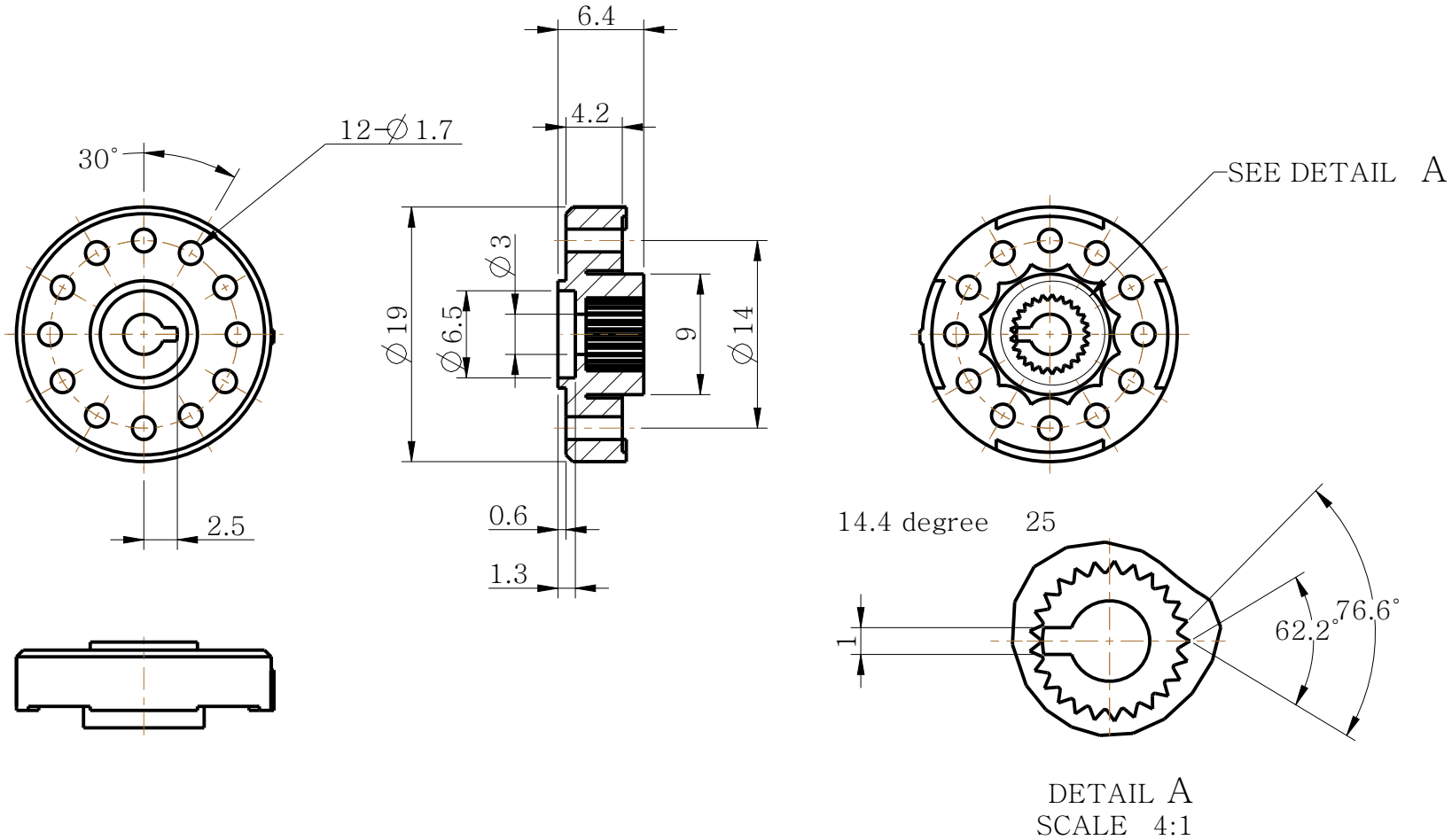
6.4
4.2
12-∅1.7
30°
SEE DETAIL A
∅3
∅19
∅6.5
9
∅14
2.5
0.6
1.3
14.4 degree
25
1
62.2°
76.6°
DETAIL A
SCALE 4:1